- Circular LED Uplight
- Aluminium body machined from solid in 6082 alloy with surface protection treatment and subsequent polyester powder paint resistant to corrosion, atmospheric conditions and salt spray
- Thermal shock resistant tempered, extraclear, anti-glare safety glass with grinded edges
- Plastic cable gland resistant to corrosion, atmospheric conditions and salt spray
- Silicone gaskets
- IP67 external power supply included
- IP68 connector for the connection between projector and power supply included
- IP68 male ad female connectors and neoprene cable for connection extension (between projector and power supply) accessories available on request
- Housing for installation included
- No visible screws
- One-step installation without the need to open the fixture
- Maximum permissible ambient temperature + 50°C

- *Proiettore LED circolare a pozzetto*
- *Corpo in alluminio tornito dal pieno lega 6082 con trattamento superficiale di protezione e successiva verniciatura in polvere di poliestere resistente agli agenti atmosferici, alla corrosione ed alle nebbie saline*
- *Vetro di sicurezza temperato con bordi molati, extrachiaro ed antiriflesso resistente agli shock termici*
- *Pressacavo in plastica resistente agli agenti atmosferici, alla corrosione ed alle nebbie saline*
- *Guarnizioni in silicone*
- *Alimentatore esterno IP67 incluso*
- *Connettore IP68 per la connessione fra proiettore ed alimentatore incluso*
- *Connettori IP68 maschio e femmina e cavo in neoprene per prolunga connessione (fra proiettore ed alimentatore) accessori disponibili su richiesta*
- *Controcassa per installazione inclusa*
- *Senza viti visibili*
- *Installazione in un'unica fase senza la necessità di aprire l'apparecchiatura*
- *Temperatura ambiente massima ammissibile +50°C*

IP67 5000 N IK08 Kg 0.60

Lamp / *Lampada*	Input / *Alimentazione*	Power / *Potenza*	Color Tolerance/ *Tolleranza Cromatica*
1 LED CREE	220/240V 50/60Hz	3W	2-SDCM / 3-SDCM

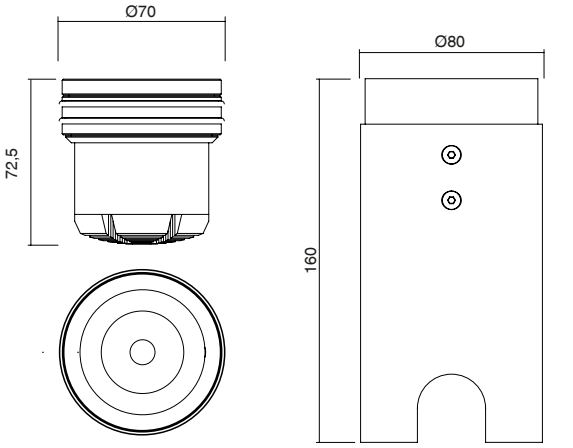

HOUSING/ CONTROCASSA

NEXO LUCE (Factory)
Strada Mirabella, 10
46040 Cavriana (MN), ITALY
T +39 0376 771513 F +39 0376 772235
sales@nexoluce.com www.nexoluce.com

Made in Italy

© Nexo Luce, a company incorporated in Italy. The logo and the name are the property of Nexo Luce SRL. The present datasheet and its content in whole or in part are the property of Nexo Luce SRL. All rights reserved. We reserve the right to change details and specifications without prior written notice.

OMNIA P V UN

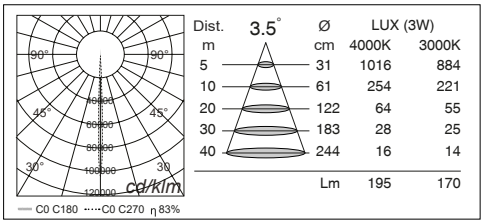

*IP68 CONNECTORS ON REQUEST
**CONNETTORI IP68 SU RICHIESTA*
code: 003.0223.0

*2x0,35 H05RN-F CABLE (1 meter) ON REQUEST
**CAVO 2X0,35 H05RN-F (1 metro) SU RICHIESTA*
code: 003.0224.0

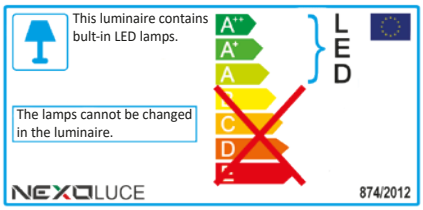

MAIN CODE *CODICE BASE*	RELEASE *EDIZIONE*	LIGHT COLOR *COLORE LUCE*	WATT *WATT*	OPTIC *OTTICA*	CONTROL *CONTROLLO*	FRAME COLOR *COLORE*
2675	**.1**	**B** 3000K	**.03** 3W	**AA** 3.5°	**1** ON/OFF	**.U** GLASS / *VETRO*
		C 4000K			**8** DIMMER 1-10V	
		* others on request / *altri su richiesta*				

CODE EXAMPLE : Projector with warm white light color at 3000K, 3W, 3.5° optic, ON/OFF control, glass finish
2675.1B.03AA1.U

ESEMPIO DI CODIFICA : Proiettore con luce calda a 3000K, 3W, ottica 3.5°, controllo ON/OFF, finitura in vetro
2675.1B.03AA1.U

NEXO LUCE (Factory)
Strada Mirabella, 10
46040 Cavriana (MN), ITALY
T +39 0376 771513 F +39 0376 772235
sales@nexoluce.com www.nexoluce.com

Made in Italy

© Nexo Luce, a company incorporated in Italy. The logo and the name are the property of Nexo Luce SRL. The present datasheet and its content in whole or in part are the property of Nexo Luce SRL. All rights reserved. We reserve the right to change details and specifications without prior written notice.